KNEADS-MINCES-WHISKS-HOMOGENISES-BLENDS-CHOPS-GRATES

AX-FP15

SPARE PARTS LIST

AXIS	16 - 12 - 13	1

MOD. **AX-FP15**

dal/from Ser.Nr.

fino al/to Ser.Nr.

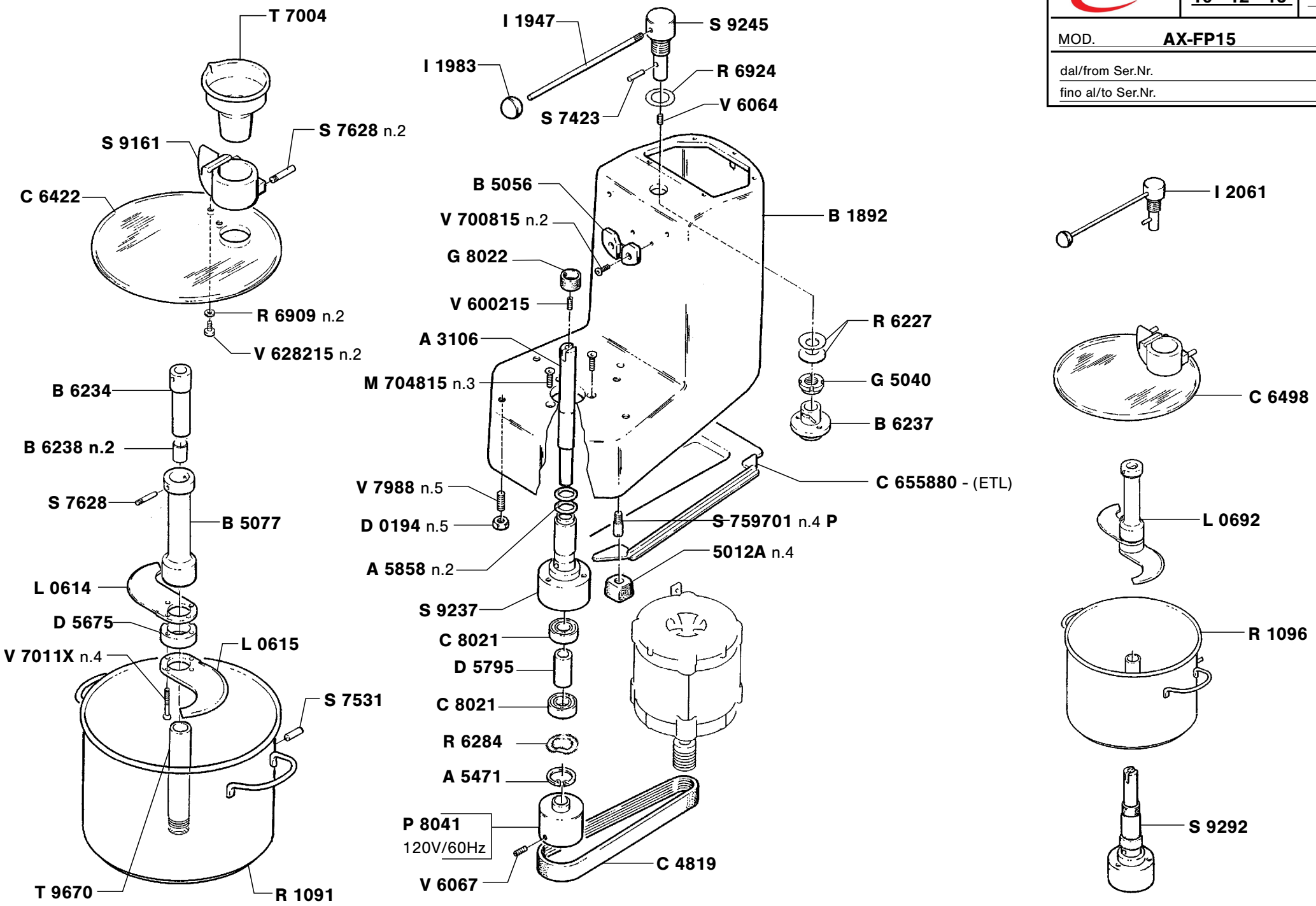
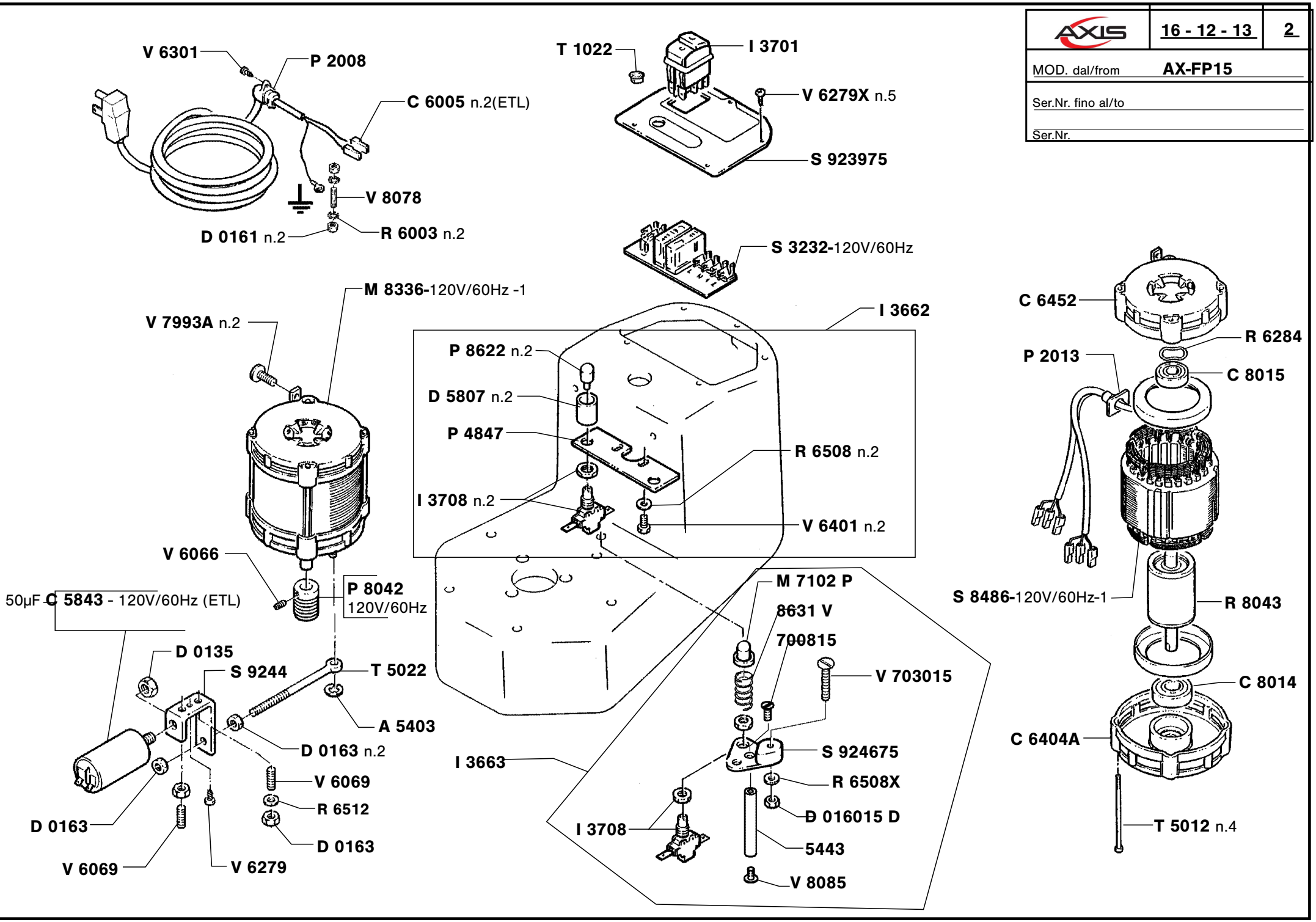
AXIS	16 - 12 - 13	2
MOD. dal/from	AX-FP15	
Ser.Nr. fino al/to		
Ser.Nr.